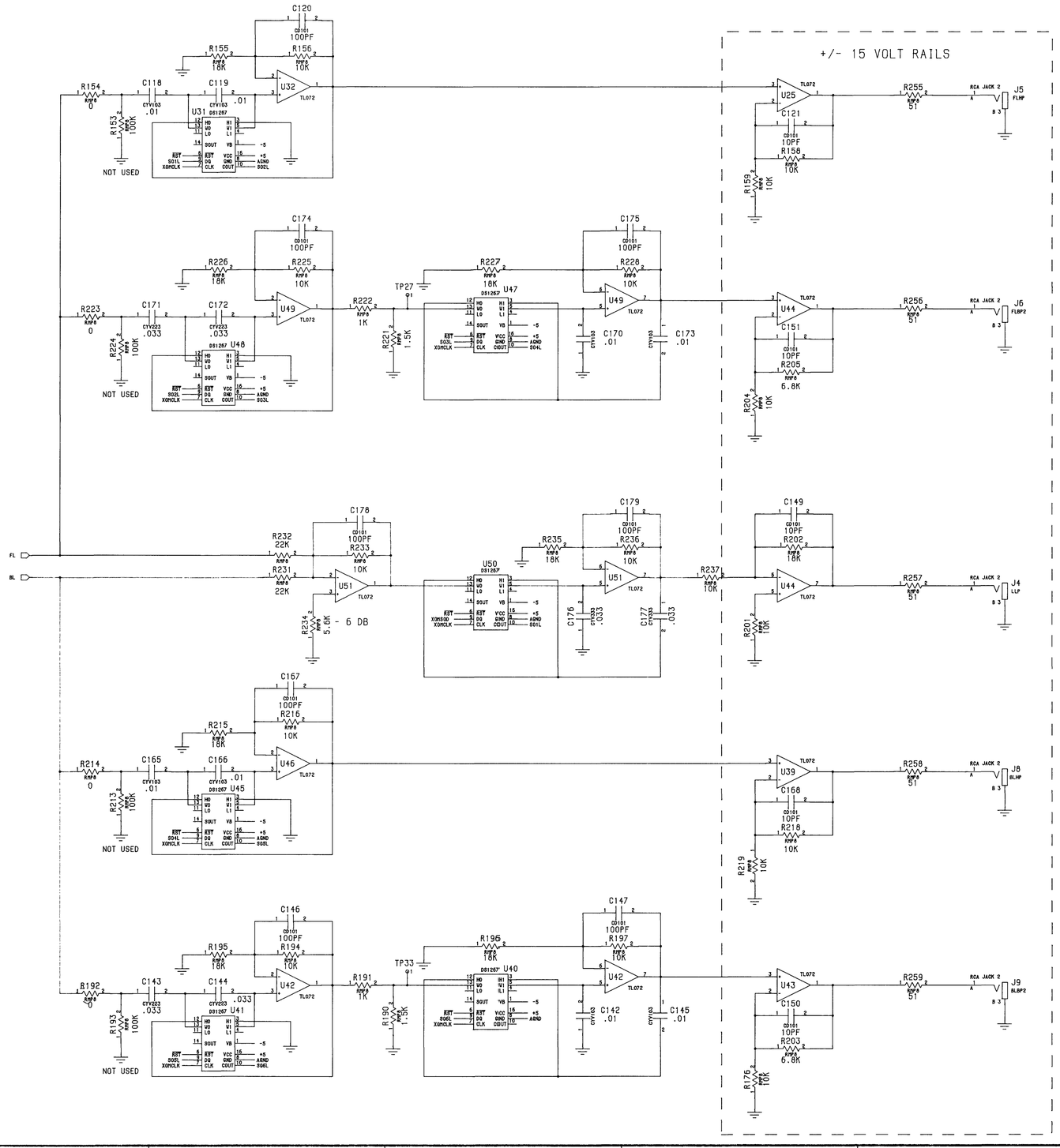

DWG. NO.	SH	REV

REVISIONS

ZONE	REV	ECO NO.	DESCRIPTION	DATE	APPROVED
	A		PRELIMINARY RELEASE	3-93	
	B		ENGINEERING UPDATE	9-93	
	C		ENGINEERING UPDATE ADDED NEW OPTO ISOLATOR	11-93	
	D		ENGINEERING UPDATE ADDED EQ & GND JUMPERS	12-93	
	E		RESISTOR VALUE CHANGES SEE REDLINE BOM.	1-94	
	E.1	3542	UPDATE PER ECO	4-94	
	E.2	3588	UPDATE PER ECO XOVR PTS, 0805 TO 1206 PKG.	6-94	

LAST USED LIST

DO NOT SCALE DRAWING

	DATE
DRAWN	
CHECKED	
FINISH	

ROCKFORD CORPORATION
TEMPE AZ.

SCHEMATIC:
SYMMETRY, EPX

SIZE D | DWG NO. SCH-0504 | REV E.2

SCALE | SHEET 1 OF 6

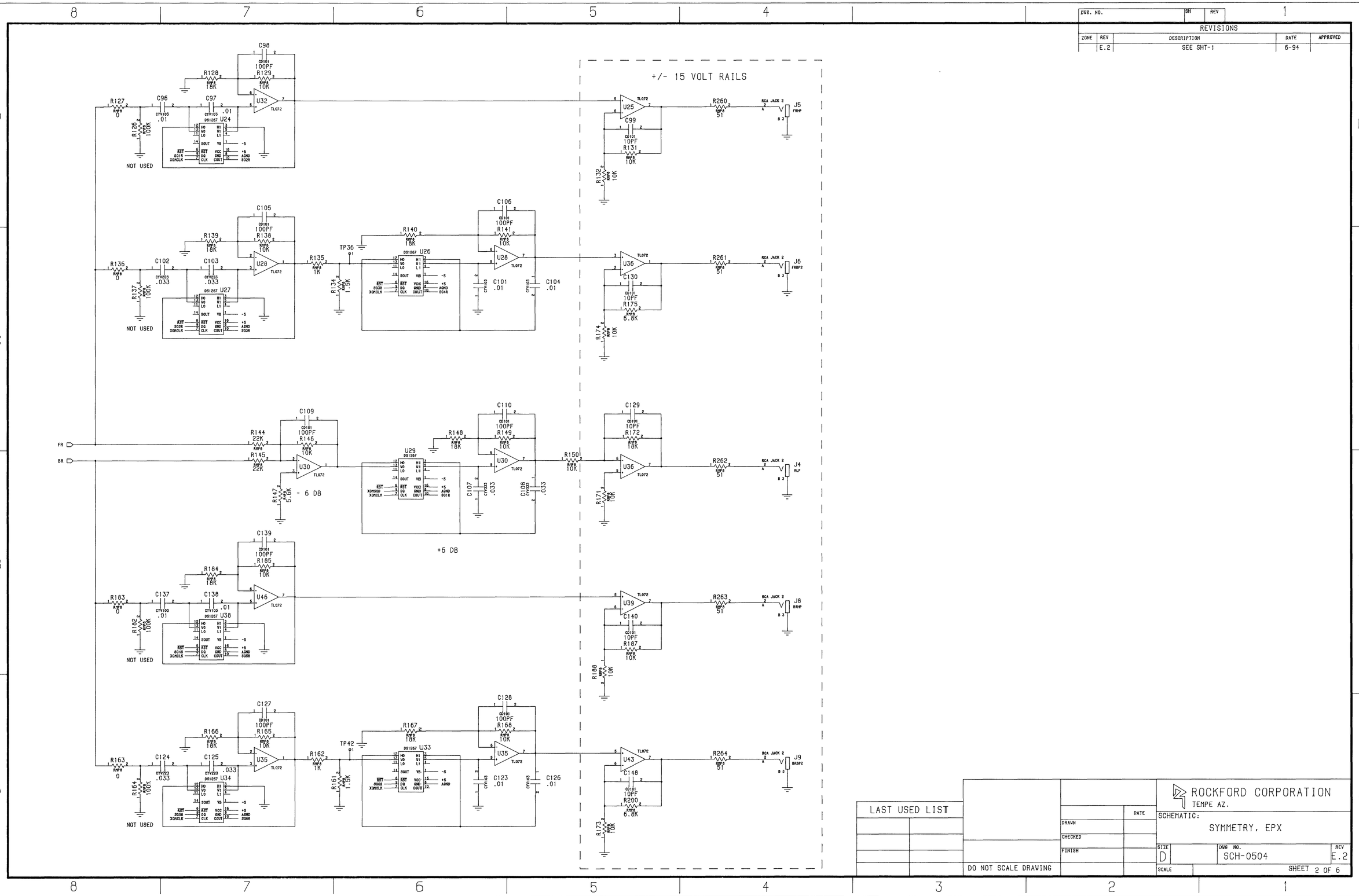

DWG. NO.	SH	REV

REVISIONS

ZONE	REV	DESCRIPTION	DATE	APPROVED
	E.2	SEE SHT-1	6-94	

LAST USED LIST

DO NOT SCALE DRAWING

	DATE
DRAWN	
CHECKED	
FINISH	

ROCKFORD CORPORATION
TEMPE AZ.

SCHEMATIC:
SYMMETRY, EPX

SIZE D | DWG NO. SCH-0504 | REV E.2

SCALE | SHEET 2 OF 6

DWG. NO.	SH	REV

REVISIONS

ZONE	REV	DESCRIPTION	DATE	APPROVED
	E.2	SEE SHT-1	6-94	

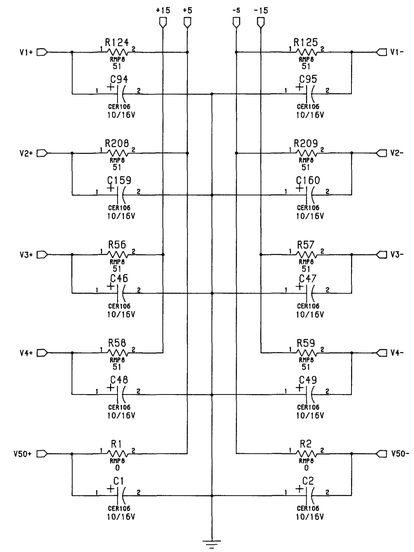

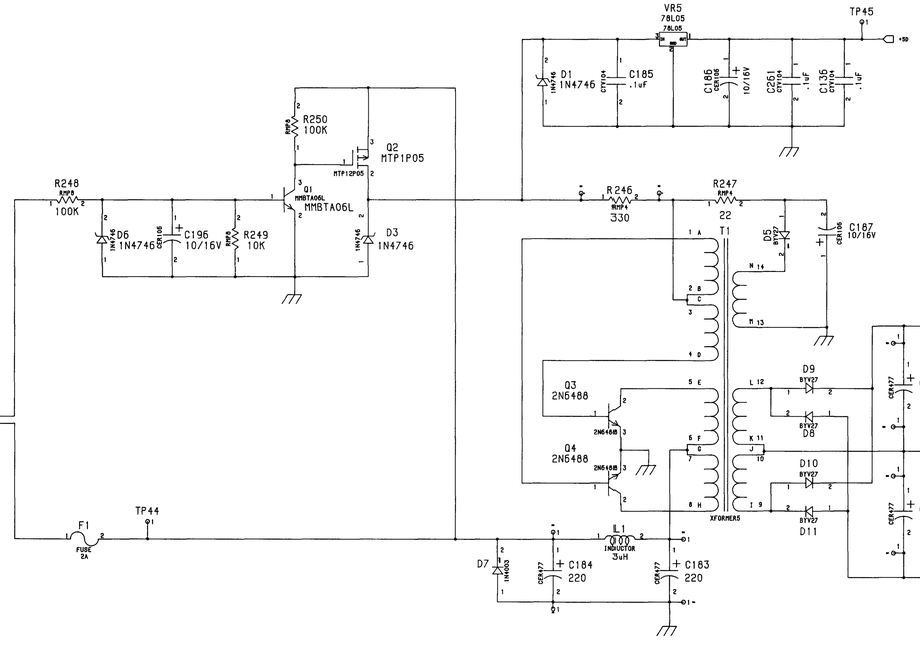

ZENER VOLTAGES
1N4733 = 5.1 VOLT
1N4734 = 5.6 VOLT
1N4746 = 18 VOLT
1N4750 = 27 VOLT

LAST USED LIST			

DO NOT SCALE DRAWING

	DATE
DRAWN	
CHECKED	
FINISH	

ROCKFORD CORPORATION
TEMPE AZ.

SCHEMATIC:
SYMMETRY, EPX

SIZE	DWG NO.	REV
D	SCH-0504	E.2

SCALE | SHEET 3 OF 6

DWG. NO.	SH	REV

REVISIONS

ZONE	REV	DESCRIPTION	DATE	APPROVED
	E.2	SEE SHT-1	6-94	

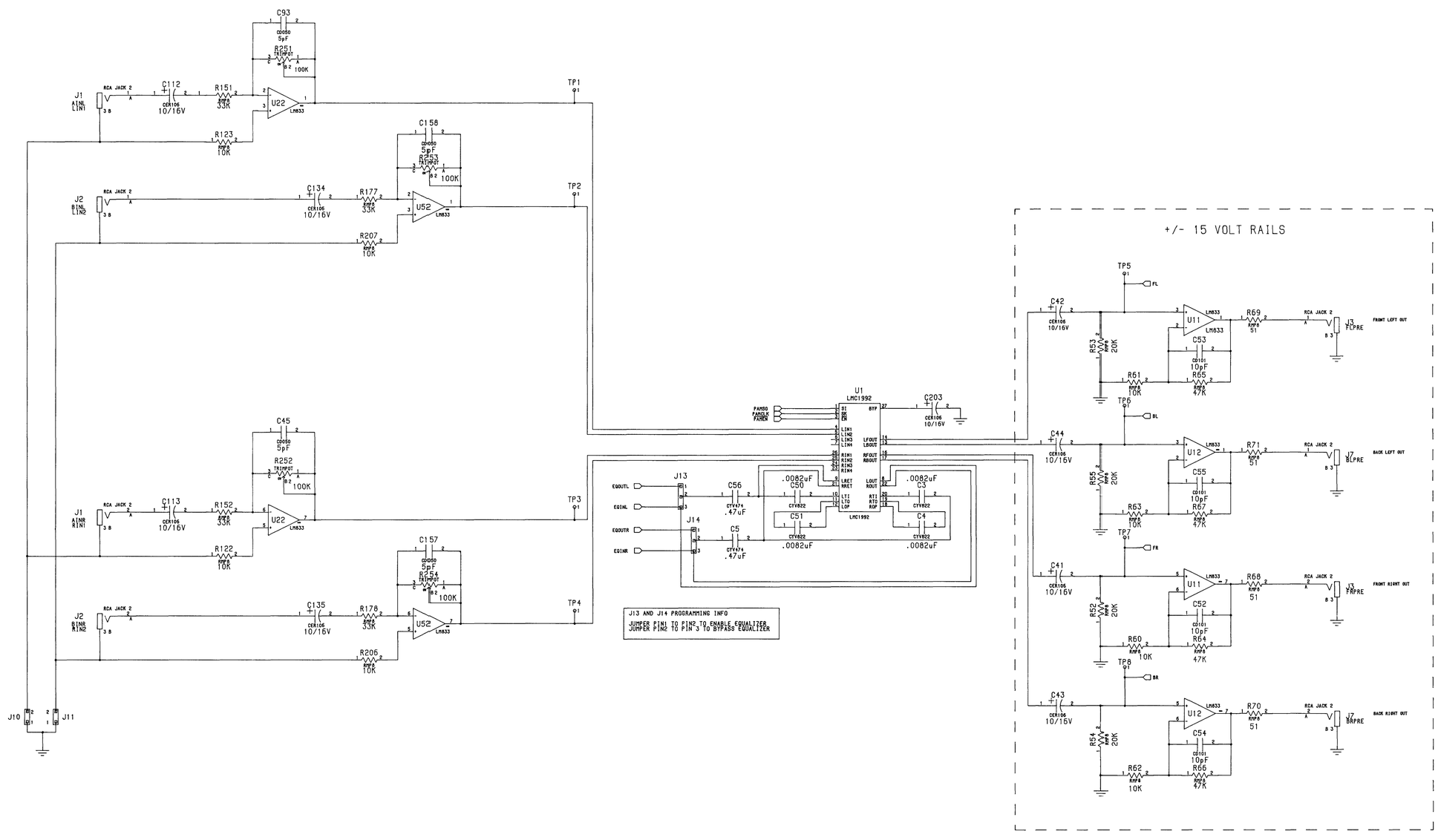

LAST USED LIST				
			DATE	
		DRAWN		
		CHECKED		
		FINISH		
		DO NOT SCALE DRAWING		

ROCKFORD CORPORATION
TEMPE AZ.

SCHEMATIC:
SYMMETRY, EPX

SIZE	DWG NO.	REV
D	SCH-0504	E.2

SCALE

SHEET 4 OF 6

DWG. NO.	SH	REV

REVISIONS

ZONE	REV	DESCRIPTION	DATE	APPROVED
	E.2	SEE SHT-1	6-94	

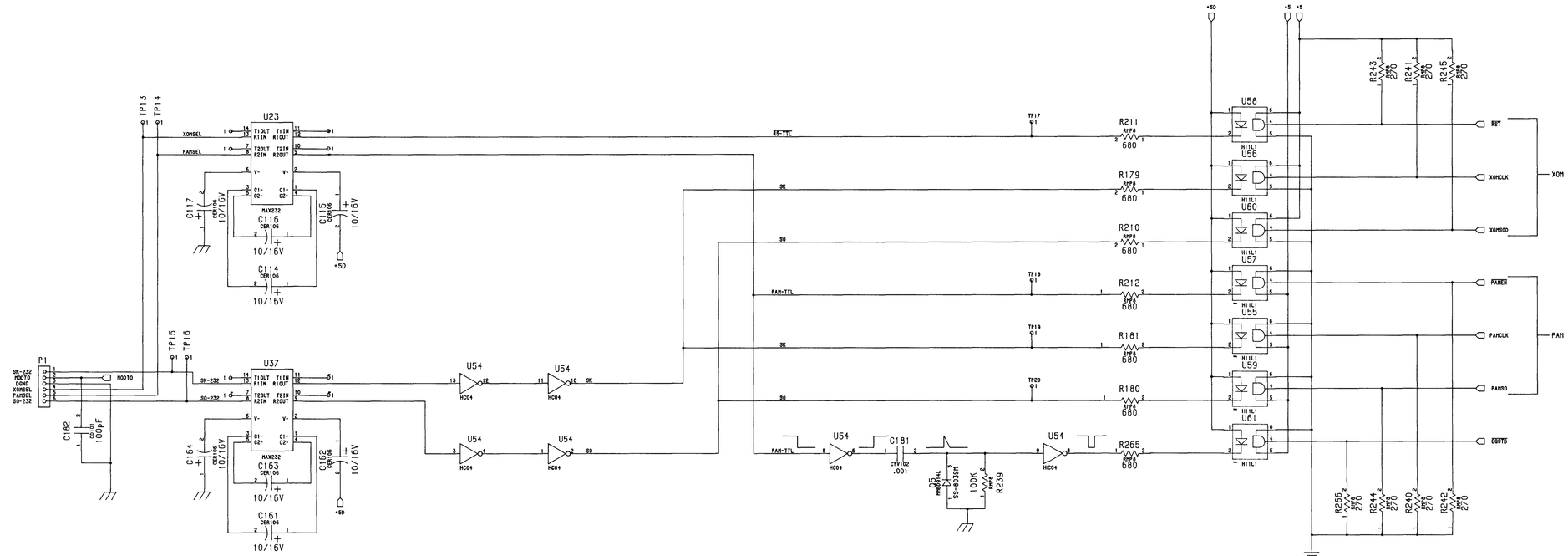

LAST USED LIST

DO NOT SCALE DRAWING

	DATE
DRAWN	
CHECKED	
FINISH	

ROCKFORD CORPORATION
TEMPE AZ.

SCHEMATIC:
SYMMETRY, EPX

SIZE	DWG NO.	REV
D	SCH-0504	E.2

SCALE

SHEET 5 OF 6

DWG. NO.	SH	REV

REVISIONS

ZONE	REV	DESCRIPTION	DATE	APPROVED
	E.2	SEE SHT-1	6-94	

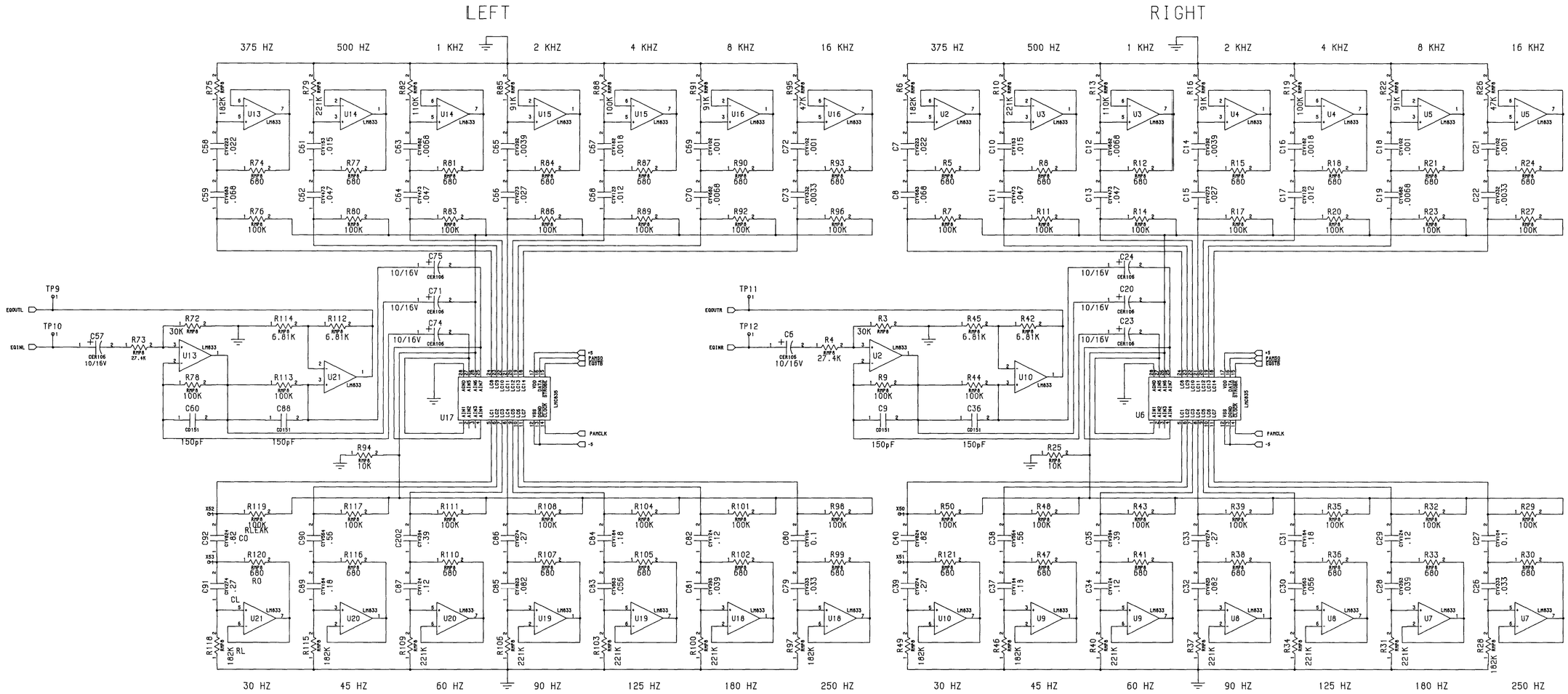

LAST USED LIST			DATE
		DRAWN	
		CHECKED	
		FINISH	
		DO NOT SCALE DRAWING	

ROCKFORD CORPORATION
TEMPE AZ.

SCHEMATIC:
SYMMETRY, STEALTH

SIZE	DWG NO.	REV
D	SCH-0504	E.2
SCALE	SHEET 6 OF 6	